CAUTION: If actuator is PLC driven, output contacts of PLC should be rated at a minimum of 1.5 times required input voltage of actuator

NOTE: To conform to various electrical codes, a green grounding screw has been installed (on the base plate) inside of actuator.

Terminal strip is suitable for up to #14 AWG wire, and should be wired as per the attached diagrams or the wiring diagram affixed inside of actuator cover.

Cover/Base bolts should be torques to 120 in/lbs

NOTE: We recommend sealing conduit openings on units installed outdoors or exposed to large temperature swings (15ºF or more).
We also recommend the heater and thermostat option in these applications.

Model		115 Vac		Cycle Time per 90 Degrees (Seconds)	Weight (lbs)
	Torque (in/lbs)	Amp Draw	Duty Cycle		
A94	150	0.5	100%	5	3.5
B94	300	0.8	75%	5	3.5

NOTE: Amp rating is considered locked rotor.
Duty cycles are for ambient temperature (73°F)

For outdoor or wet locations it is recommended prior to replacing the cover that the top shaft seal be cleaned and coated with silicone grease. Also clean shaft and lightly coat seal area of shaft with silicone grease.

Operation

Manual Override Operation
Reference Drawing #279QM

Push down on handle (Part #34) and rotate within labeled limits.
To re-engage simply rotate actuator handle in opposite direction until it moves up and re-engages.

Allow 5.50 inches clearance for cover removal.

CAUTION: The manual override should only be used when there is no power applied to actuator. When power is restored the actuator will automatically resume normal operation.

Setting Limit Switches
Reference Drawing #279QM

Disconnect power!

Open Travel Limit Switch (SW-2 Part #14):
Using declutchable manual override, move the valve into a full open position. Then loosen set screws on top cam (Part #21) and rotate cam (CCW) into limit switch arm until a click is heard, this designates the switch circuit has opened and defines a full open position. Tighten 2 set screws (Part #22) on cam.

Close Travel Limit Switch (SW-1 Part #14):
Using declutchable manual override, move the valve to a full closed position, loosen set screws on bottom cam (Part #21) and rotate cam (CW) into limit switch arm until a click is heard, this designates the switch circuit has opened and defines a full closed position. Tighten 2 set screws (Part #22) on cam.

Manually position valve to mid stroke. Reapply power to actuator and drive to open or closed position. Actuator motor will run. The shaft will not turn until drive pins reseat in drive gear. This could take up to 10 seconds.

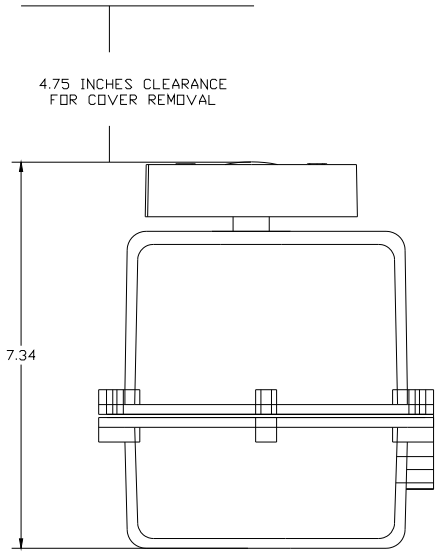

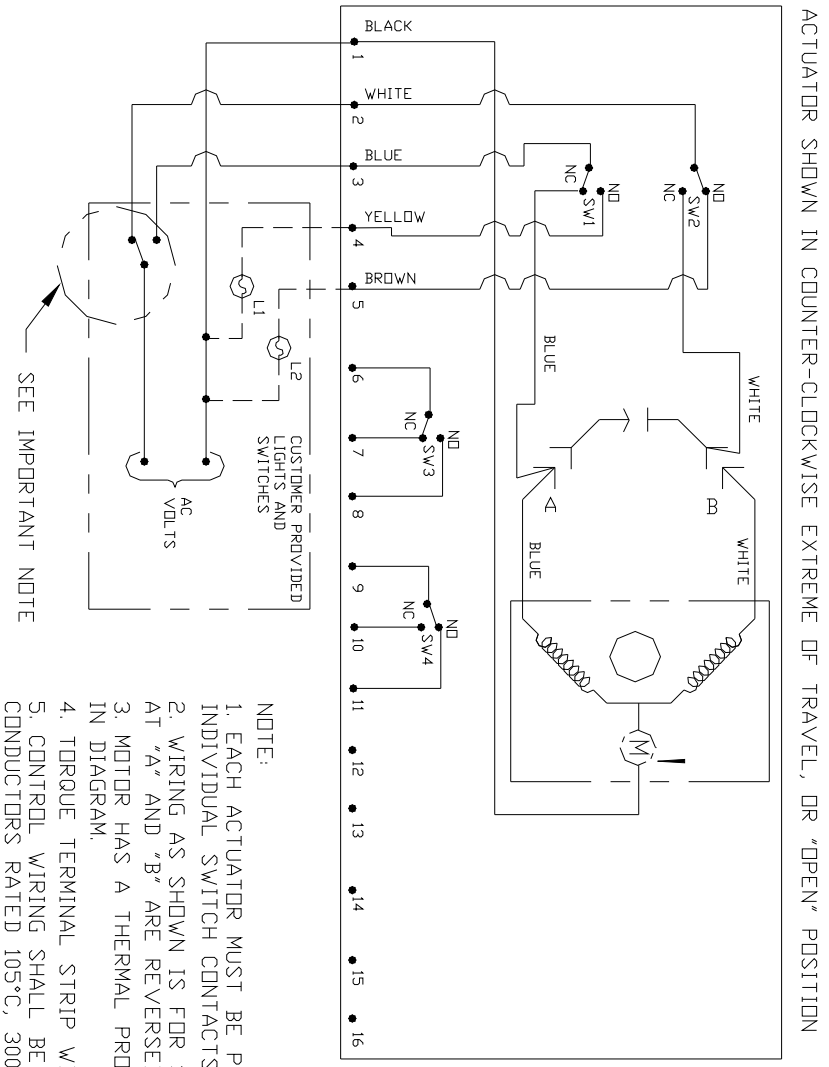

TERMINAL #1 = NEUTRAL
TERMINAL #2 = HOT TO OPEN
TERMINAL #3 = HOT TO CLOSE
TERMINAL #4 = LIGHT INDICATION CLOSED
TERMINAL #5 = LIGHT INDICATION OPEN
TERMINAL #6-8 = CLOSED DRY CONTACTS
TERMINAL #9-11 = OPEN DRY CONTACTS

NOTE:
1. EACH ACTUATOR MUST BE POWERED THRU ITS OWN INDIVIDUAL SWITCH CONTACTS TO AVOID CROSS FEED.
2. WIRING AS SHOWN IS FOR S92 & A92 MOTOR LEADS AT "A" AND "B" ARE REVERSED FOR B92 AND C92.
3. MOTOR HAS A THERMAL PROTECTOR AS SHOWN BY (M) IN DIAGRAM.
4. TORQUE TERMINAL STRIP WIRING TO 5 IN-LBS.
5. CONTROL WIRING SHALL BE INSULATED WITH CONDUCTORS RATED 105°C, 300V MINIMUM.
6. 75°C COPPER SUPPLY WIRES ONLY.

Need more

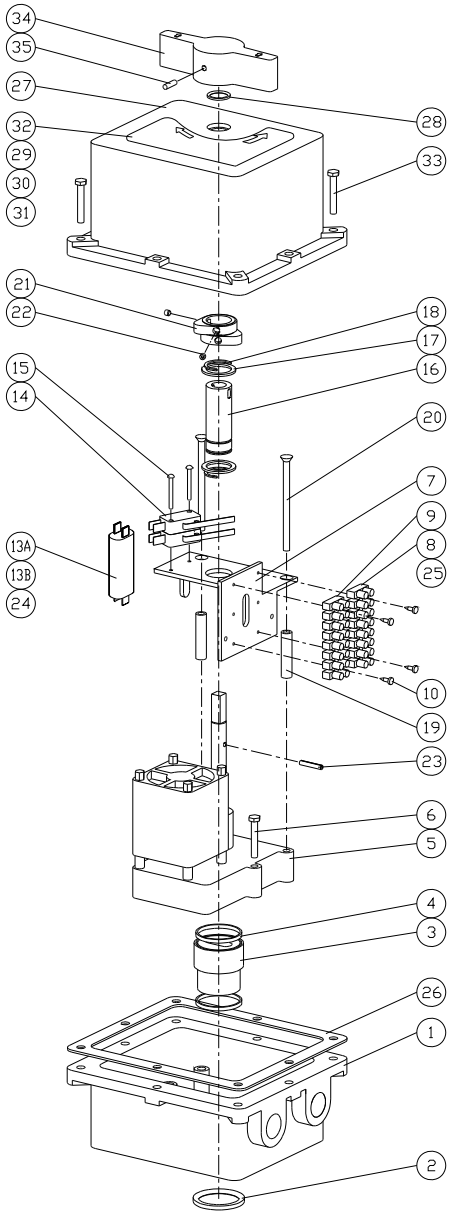

ITEM	PART NO	QTY	DESCRIPTION
1	7403002	1	BASE
2	7403000	1	BASE SEAL
3	7403017	1	OUTPUT COUPLING
4	7403005	2	COUPLING GASKET
5	7403004	1	MOTOR
6	7403022	2	MOTOR SCREW
7	7403011	1	BASE PLATE
8	7401420	1	TERMINAL BLOCK 1-8
9	7401425	1	TERMINAL BLOCK 9-16
10	7401600	4	TERMINAL BLOCK SCREW
13A	7401948	1	4.2 MFD CAPACITOR - A94
13B	7402004	1	6.7 MFD CAPACITOR - B94
14	7401460	2	LIMIT SWITCH
15	7401620	2	LIMIT SWITCH SCREW
16	7403016	1	OUTER SHAFT
17	7403006	2	OUTER SHAFT GASKET
18	7403009	2	RETAINING RING
19	7403018	2	STANDOFF
20	7403014	2	BASE PLATE SCREW
21	7401480	2	CAM
22	7401740	4	CAM SCREW
23	7403010	1	PIN
24	7403023	1	2 PC HARNESS
25	7403015	1	4 PC HARNESS
26	7403007	1	BASE GASKET
27	7403001	1	COVER
28	7403020	1	COVER SEAL
29	7403019	1	WIRE DIAGRAM LABEL
30	7403025	1	OPTION LABEL
31	7403030	1	QM II LABEL
32	7403040	1	OVERRIDE LABEL
33	7403032	8	COVER SCREW
34	7403003	1	HANDLE
35	7401700	1	HANDLE SCREW
36	7403021	1	QM II BOX

NOTE:
1. LOCATE ITEM 29 & 30 ON INSIDE SURFACES OF COVER (ITEM 27).
2. LOCATE ITEM 31 ON OUTSIDE BACK SURFACE OF COVER (ITEM 27).

THIS DRAWING AND ALL INFORMATION HEREON IS THE PROPERTY OF ASAHI/AMERICA. ANY COPYING, REPRODUCTION OR UNAUTHORIZED USE IS FORBIDDEN WITHOUT WRITTEN CONSENT.

	NAME	DATE
DR	D CAMERON	9/13/01
APPD		
PROD		
WO#/SO#		
FILE	ACAD11/QM	

ASAHI/AMERICA
ISO 9001 CERTIFIED
35 GREEN STREET, P.O. BOX 653, MALDEN, MA.

SERIES 94
EXPLODED VIEW

SIZE	DWG. NO.	REV
A	279QM	B

SCALE NTS SHEET 1 OF 1

Need more information? Download a complete IOM at our website. www.asahi-america.com